DATASHEET

3-Inch Fixed Dome Mount

TR-WM03-B-IN

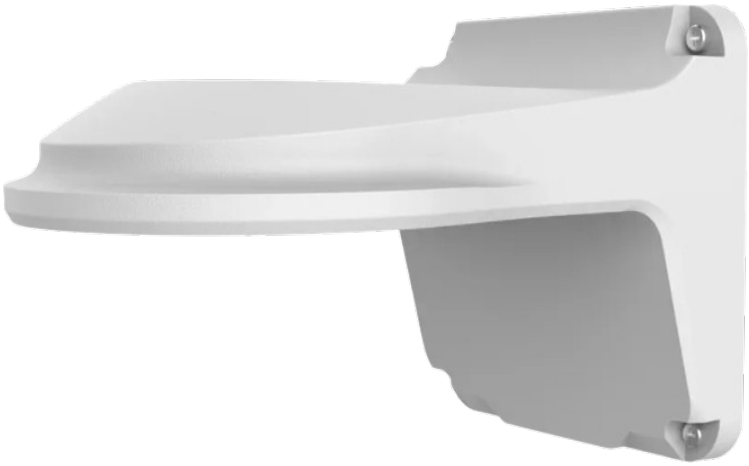

Specifications

Bracket	TR-WM03-B-IN
Application	Wall installation for IPC32X and IPC361X series
Dimensions	126mm x 126mm x 188mm (5”x 5”x 7.4”)
Weight	0.5kg(1.1lb)
Material	Aluminum alloy
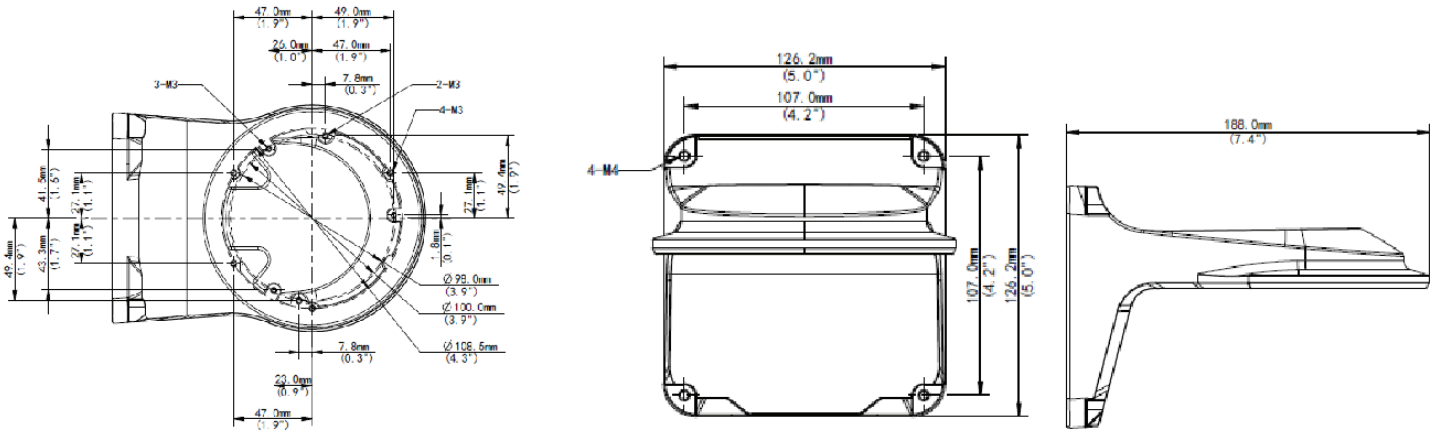
Dimension